Meriam 6/1 – 6/6 : 2D Kinetics : Review Problems

(a) **'Snapshot' problems:** Find $\vec{F}$, or $\vec{M}$, or $\vec{a}$, or α at a specific instant in time.

1/ $\sum \vec{F} = m\vec{a}_G$

2/ $\sum \vec{M}_O = I_O \vec{\alpha}$ +↺

3/ $\sum \vec{M}_G = I_G \vec{\alpha}$ +↺

4/ $\sum \vec{M}_P = I_P \vec{\alpha}$ +↺ for rolling wheel

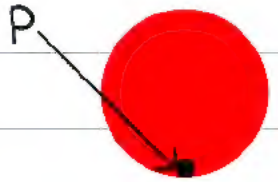

$I_G = mk^2$, k = radius of gyration

$I_O = I_G + mr_{OG}^2$, parallel axis theorem.

The above equations are supplemented by the kinematic relationships (Meriam chapter 5):

$$\vec{a}_A = \vec{a}_B + \omega^2 r_{AB}\hat{e}_n +/- |\alpha r_{AB}|\hat{e}_t$$

$\omega^2 r_{AB}\hat{e}_n$: vector pointing from A towards B

$|\alpha r_{AB}|\hat{e}_t$: $\perp$ to r_{AB}

$$|\alpha| = \frac{|\vec{a}_P - \vec{a}_Q|_t}{r_{PQ}}$$

(b) **'Journey' or trip problems:** Find final speed or work done:

$$(\vec{V}_G)_2 = (\vec{V}_G)_1 + \int_{t_1}^{t_2} \vec{a}_G(t)\,dt$$

$$\omega_2 = \omega_1 + \int_{t_1}^{t_2} \alpha(t)\,dt$$

or

$$T_2 = T_1 + U_{1\to 2}$$

$-\Delta V$ for conservative forces

29(b)

2. A circular wheel of mass 25 kg and radius 0.80 meters has a radius of gyration about its central axle of 0.6 meters. A slender, uniform bar of length 2.40 meters and mass 20 kg is then welded to the wheel as shown. The wheel/bar assembly is initially at rest at time t = 0, with the centre of the wheel located at the origin of the x-y coordinate system. A constant horizontal force P = 100 N acts through a rope wound around the inner hub of the wheel as shown.

(a) Find the x-y coordinates of the center of gravity of the wheel-bar assembly at time t = 0.
(b) Find the moment of inertia of the wheel-bar assembly about its centre of gravity.
(c) Assume that the wheel skids on the ground. For what value of μ_k would the angular acceleration equal zero?
(d) Now assume that the wheel starts rolling without skidding at time t = 0. How much work will have been done by the force P when the bar first reaches a horizontal orientation?

$g = 9.81\ m/s^2\ \downarrow$

Final exam MIE 200 Dec/98

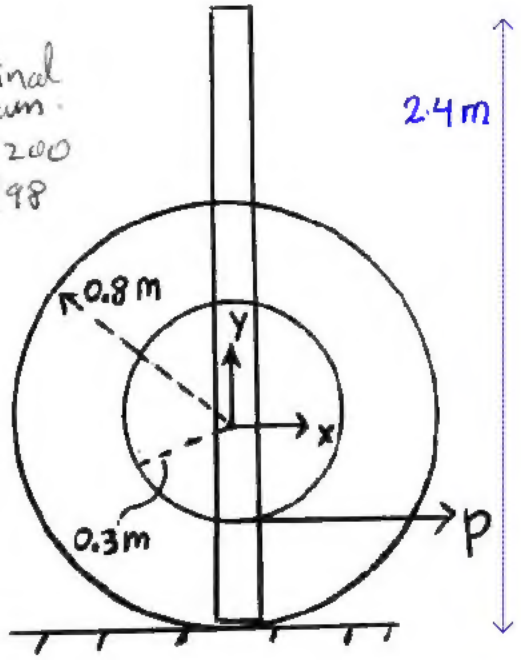

Solution

(a) entire assembly

$$\vec{r}_G = \frac{\sum m_i \vec{r}_i}{\sum m_i} = \frac{(25\ kg\ wheel)(0) + (20\ kg\ bar)(0\hat{i} + 0.4\hat{j})}{25\ kg + 20\ kg}$$

$$\vec{r}_G = 0\hat{i} + 0.178\hat{j}\ \text{meters, or } \{0, 0.178\}\ \text{meters}$$

(b) entire assembly

$$I_G = (mk^2 + md^2)_{wheel} + \left(\frac{mL^2}{12} + md^2\right)_{bar}$$

$$I_G = \left[(25)(0.6)^2 + (25)(0.178)^2\right]_{wheel} + \left[\frac{(20)(2.4)^2}{12} + (20)(0.222)^2\right]_{bar}$$

$$I_G = 20.4\ kg \cdot m^2$$

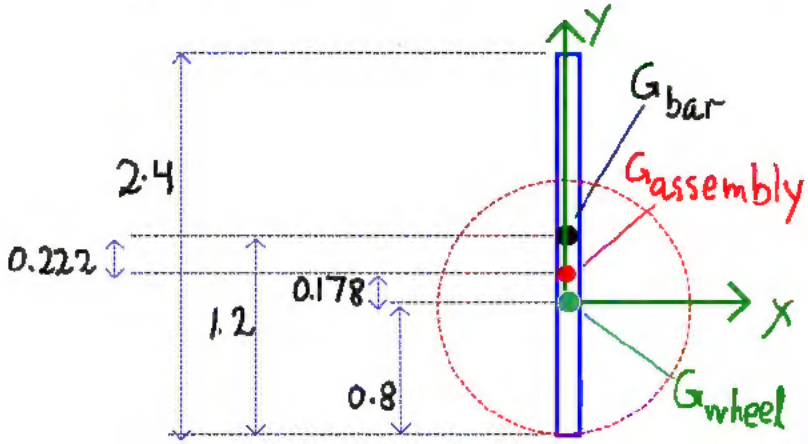

(c)

friction $= N\mu_k$

$= mg\mu_k$

$\alpha = 0$

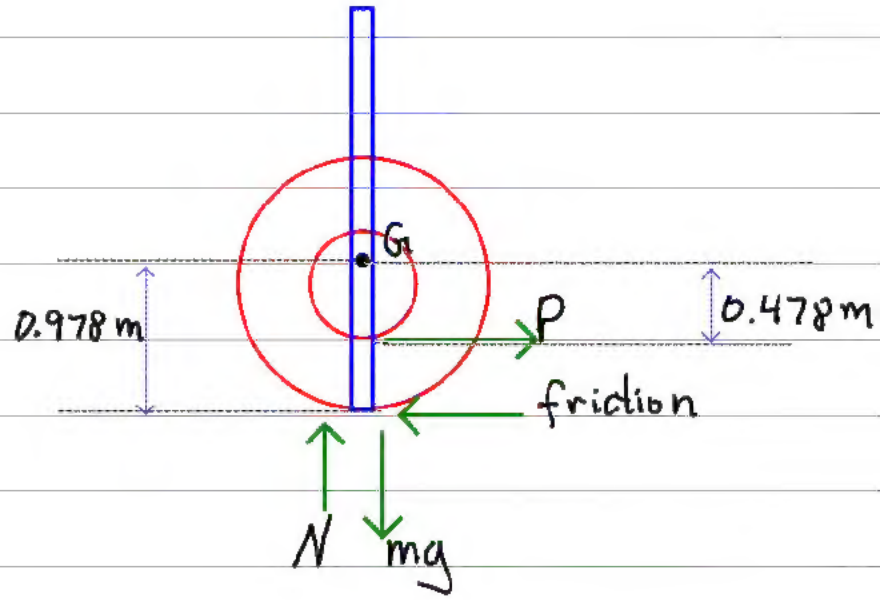

$\rightarrow \Sigma M_G = 0 \quad (+\circlearrowright)$

$\Sigma M_G = (100)(0.478) - (45\,kg)(9.81)(\mu_k)(0.978\,m) = 0 \quad (+\circlearrowleft)$

$\rightarrow \boxed{\mu_k = 0.11}$

$\boxed{\text{Friction} = mg\mu_k = (45\,kg)(9.81)(0.11) = 49 \text{ Newtons}}$

(d) Work done by P when bar rotates to the right by 90°?

$\rightarrow$ Center of wheel travels ¼ circumference $= \frac{2\pi R}{4} = 1.257$ m

$\rightarrow$ Bottom of inner hub travels $\left(\frac{0.5}{0.8}\right)(1.257\,m)$

$= 0.785$ m

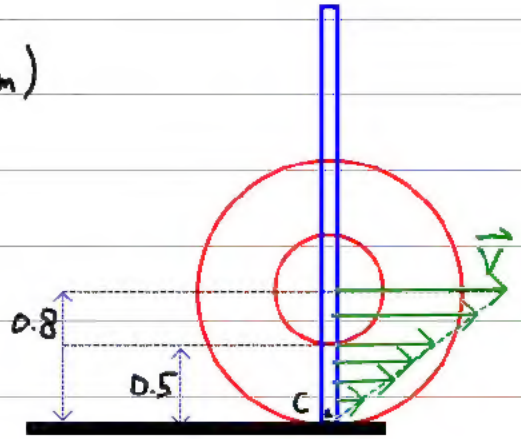

$\rightarrow$ work done $= \int \vec{P} \cdot d\vec{r}$

$= (100 \text{ Newtons})(0.785\,m)$

$= 78.5$ Joules

29(d)

LAST Name: _____

First Name: _____

Student Number: _____

MIE 200F - Quiz number 6b - November 15, 2001
quiz duration = 20 minutes

A thin pole of length 15 meters and mass 10 kg is lying on a frictionless ice surface. At time t = 0, a force $\vec{F} = 180\text{N}\,\hat{j}$ is applied to one end of the pole as shown. Find the angular acceleration α the instant after the force is applied.

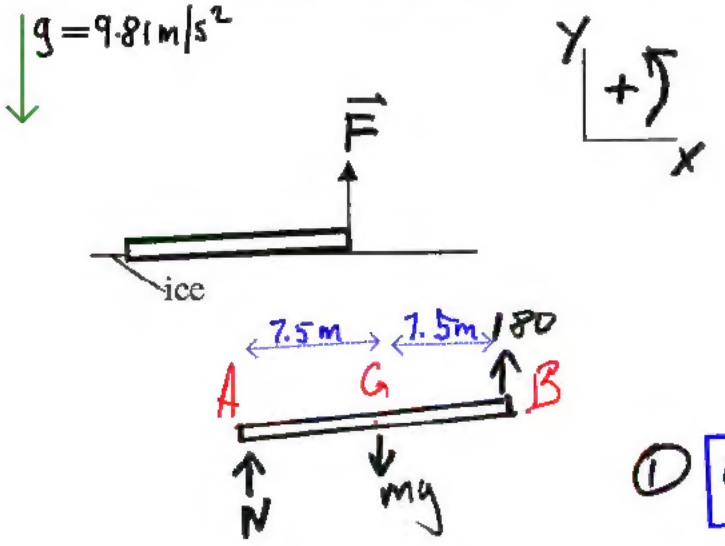

$g = 9.81\ \text{m/s}^2 \downarrow$

$I_{c\,of\,g}$ for a rod $= m L^2/12$

$I_{c\,of\,g}$ for a uniform disk $= m R^2/2$

$\vec{V}_P = \vec{V}_Q + \vec{V}_{P/Q}$

$\vec{a}_{P/Q} = -(\omega^2 R_{PQ})\hat{e}_r + (\alpha r)\hat{e}_\theta$

$T = \tfrac{1}{2} m (v_{c\,of\,g})^2 + \tfrac{1}{2} I_{c\,of\,g}\,\omega^2 = \tfrac{1}{2} I_o\,\omega^2$

$T_2 = T_1 + U_{1\to 2}$

$I_o = I_{c\,of\,g} + m\,d^2$

$|\vec{V}_{P/Q}| = \omega R_{PQ}$

$\Sigma F_y = m (a_{cofg})_y$

① $180 + N - (10)(9.81) = 10(a_{cofg})_y$

$\Sigma M_{cofg} = I_{cofg}\,\alpha$ (+↻)

$(180)(\tfrac{15}{2}) - (N)(\tfrac{15}{2}) = \tfrac{1}{12} mL^2 \alpha$

② $1350 - 7.5N = 187.5\alpha$

Two eqns, with unknowns α, $(a_{cofg})_y$, N

Kinematics: $(a_{cofg})_y = 7.5\alpha$ (see * below)

Eqn ① becomes: $180 + N - 98.1 = (10)(7.5\alpha)$ (+↻)

(1a) $81.9 + N = 75\alpha$

Combine (1a) & (2) ⇒

$1350 - 7.5[75\alpha - 81.9] = 187.5\alpha$

$\alpha = 2.625^{-2}$ ↻

* $\vec{a}_G = \vec{a}_A + (a_{G/A})_n(-\hat{i}) + (a_{G/A})_t\,\hat{j}$

take y-components of this eqn:

* $(a_G)_y = 0 + 0 + 7.5\alpha$

The uniform 100-kg pole AB is suspended in the horizontal position by the three wires shown. If wire CB breaks, calculate the tension in wire BD immediately after the break.

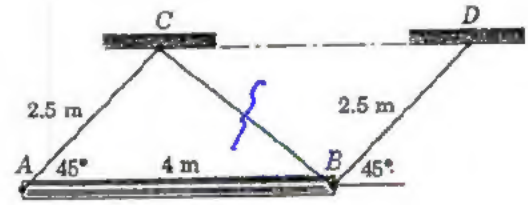

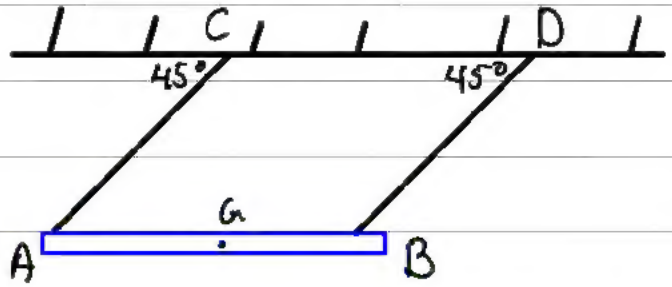

1/ AB translates (no rotation)

2/ $\sum M_G = 0 \rightarrow T_{AC} = T_{BD}$

3/ $\omega = \alpha = 0 \rightarrow \vec{a}_A = \vec{a}_G = \vec{a}_B$

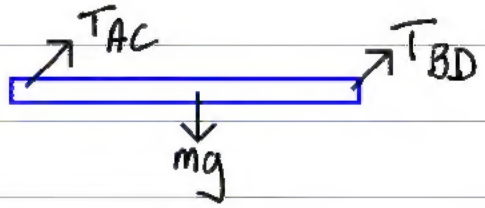

$$\vec{a}_B = \cancelto{0}{\vec{a}_D} + \cancelto{0}{(a_{B/D})_n}\,\hat{e}_n + (a_{B/D})_t\,\hat{e}_t$$

$\omega^2 r_{BD}$

45°

$$\vec{a}_B = |\vec{a}_B|(\cos 45°\,\hat{i} - \sin 45°\,\hat{j})$$

$$\sum \vec{F} = m_{AB}\,\vec{a}_G = m_{AB}\,\vec{a}_B \qquad (\text{because } \vec{a}_B = \vec{a}_G)$$

$$= m_{AB}\,|\vec{a}_B|(\cos 45°\,\hat{i} - \sin 45°\,\hat{j})$$

$\rightarrow$ x: $2T_{BD}\cos 45° = (100\,kg)(|\vec{a}_G|\cos 45°)$

y: $2T_{BD}\cos 45° - (100\,kg)(9.81) = -(100\,kg)(|\vec{a}_G|\sin 45°)$

Solve for T_{BD} & $|\vec{a}_G|$

$\rightarrow$ $T_{BD} = 347$ Newtons

$\vec{a}_G = 6.93\,(\cos 45\,\hat{i} - \sin 45\,\hat{j})\ m/s^2$

29(f)

LAST Name: ANSWERS

First Name: _____

Student Number: _____

MIE 200F - Quiz number 6a - November 13, 2002
quiz duration = 20 minutes

A disk with two hubs of mass 15 kg is rolling without slipping on a rail as shown. At time t = 0, its center of the wheel has a speed of 3 m/s to the right. A rope is wound around the outer hub of the wheel; the tension on the rope is P = 4 N. The radius of gyration is $k_{c\ of\ g}$ = 2 m. The inner hub has radius 1.5 meters, and the outer hub has radius 3.5 meters.

(a) Find the kinetic energy of the disk at t = 0.

(b) Find the change in kinetic energy of the wheel, after it has rolled 5 meters to the right. (Watch the plus/minus signs!)

$I_{c\ of\ g} = m\,(k_{c\ of\ g})^2$ $\quad I_o = I_{c\ of\ g} + m\,d^2$

$\Sigma \vec{M} = I\,\vec{\alpha}$ $\quad \Sigma \vec{F} = m\,\vec{a}_{c\ of\ g}$

$T_2 = T_1 + U_{1\to 2}$ $\quad \vec{V}_P = \vec{V}_Q + \vec{V}_{P/Q}$ $\quad |\vec{V}_{P/Q}| = \omega r_{PQ}$

$\vec{a}_{P/Q} = -(\omega^2 r_{PQ})\hat{e}_n + (\alpha r)\,\hat{e}_t$ $\quad \vec{a}_P = \vec{a}_Q + \vec{a}_{P/Q}$

$T = \frac{1}{2} m\,(v_{c\ of\ g})^2 + \frac{1}{2} I_{c\ of\ g}\,\omega^2 = \frac{1}{2} I_o\,\omega^2$

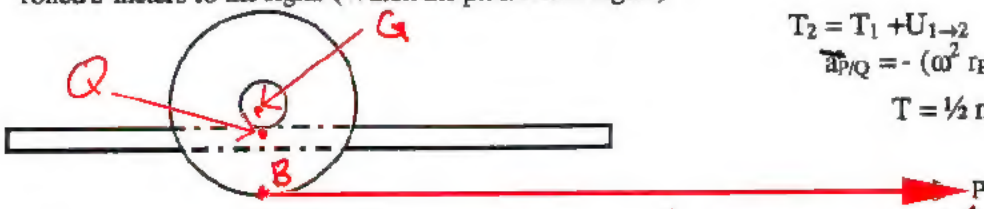

(a) $I_Q = m k^2_{c/g} + m d^2 = (15)(2^2) + (15)(1.5)^2 = 93.75\ kg\,m^2$

$\omega = \frac{3-0}{1.5\,m} = 2\ s^{-1}$

$T = \frac{1}{2} I_Q \omega^2 = (\frac{1}{2})(93.75)(2^2) = 187.5\ J$

(b) Keypoint: If wheel moves to the right then rope gets wound <u>onto</u> wheel; rope moves to the <u>left</u>.

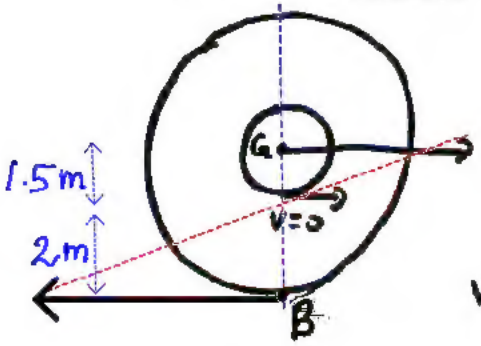

$V_G = (1.5\,m)(\omega) \rightarrow \omega = V_G / 1.5$ ②

$V_B = -(V_G)\left(\frac{2\,m}{1.5\,m}\right) = -1.33\,V_G$

or $V_B = -(2m)(\omega) = -1.33\,V_G$

$\Delta T = U = \vec{P} \cdot \vec{d} = (4N)(-6.67) = -26.67\ J.$
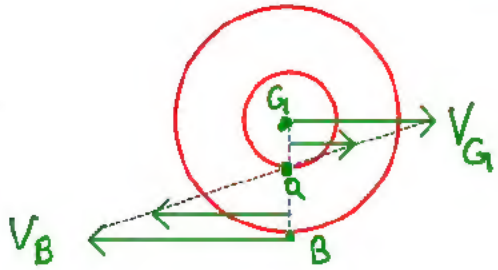
-1.33×5 meters